Work Order ID 73091

Thursday, August 25, 2011 1:27:01 PM

Item ID: D3299-7
Revision ID:
Item Name: Fitting
Start Date: 8/25/2011 **Start Qty:** 4.00
Required Date: 9/5/2011 **Req'd Qty:** 4.00
Reference:

Accept

Setup Start
Stop

Cust Item ID:
Customer:

Run Start
Stop

Approvals: **Process Plan:** MNP **Date:** _____ **Tooling:** _____ **Date:** _____
QC: _____ **Date:** _____ **SPC (Y/N):** _____ **Date:** _____

Sequence ID/ Work Center ID	Operation Description	Set Up/ Run Hours	Tool ID	Tool #	Plan Code	Accept Qty	Reject Qty	Reject Number	Insp. Stamp
Draw Nbr D3299	**Revision Nbr** C								
100	Hardinge CNC LATHE SMALL	0.00				4	0		
Doosan	**Memo**	0.00							
Doosan Lathe	Turn as per Folio FA901 and Dwg D3299 FOLIO REV: AA DWG REV: C DEBURR								
110	QC2- Inspect parts off machine FAI/FAIB	0.00				4	0		
QC	**Memo**	0.00							
Quality Control									

Dart Aerospace Ltd

W/O: 73091 ~~73071~~

WORK ORDER CHANGES

DATE	STEP	PROCEDURE CHANGE	By	Date	Qty	Approval Chief Eng / Prod Mgr	Approval QC Inspector

Part No: D32991 PAR #: N/A Fault Category: Machining NCR: Yes No DQA: [illegible] Date: 11.10.07

Resolution: ~~Scrap~~ Acceptable Use as is Disposition: ~~Scrap~~ Use as is QA: N/C Closed: CK Date: 11/10/11

WORK ORDER NON-CONFORMANCE (NCR)

NCR:

DATE	STEP	Description of NC Section A	Corrective Action Section B: Initial Chief Eng	Action Description Chief Eng	Sign & Date	Verification Section C	Approval Chief Eng	Approval QC Inspector
11.09.26	100	2.19 DIM IS 2.13. 1.00 REF IS 0.94. R.C. lack of attention	[illegible] 11.09.26 [illegible]	Threaded ends are to dwg. Bored hole is centered on block. Sufficient wall around bore (0.083) Acceptable	[illegible] 11/09/26	[illegible] 11/09/26	[illegible] 11.09.26 [illegible]	[illegible] 11/09/26

NOTE: Date & initial all entries

H:\fFORMS\Quality Assurance\approved QA\NCRWO RevE

Work Order ID 73091

Thursday, August 25, 2011 1:27:01 PM

Item ID: D3299-7 **Accept** **Setup Start** **Stop**

Revision ID:

Item Name: Fitting

Start Date: 8/25/2011 **Start Qty:** 4.00 **Cust Item ID:**

Required Date: 9/5/2011 **Req'd Qty:** 4.00 **Customer:**

Reference:

Run Start **Stop**

Approvals: **Process Plan:** _____ **Date:** _____ **Tooling:** _____ **Date:** _____

QC: _____ **Date:** _____ **SPC (Y/N):** _____ **Date:** _____

Sequence ID/ Work Center ID	Operation Description	Set Up/ Run Hours	Tool ID	Tool #	Plan Code	Accept Qty	Reject Qty	Reject Number	Insp. Stamp
120	HAAS CNC VERTICAL MACHINING #1	0.00				4	0		
HAAS 1	**Memo**	0.00							
HAAS CNC vertical machine #1	Machine as per Folio FA451 and Dwg D3299 Deburr								
130	QC2- Inspect parts off machine FAI/FAIB	0.00				4	0		
QC	**Memo**	0.00							
Quality Control									
140	QC8- Inspect parts - second check	0.00				4	0		
QC	**Memo**	0.00							
Quality Control									

Dart Aerospace Ltd

W/O:		WORK ORDER CHANGES					
DATE	STEP	PROCEDURE CHANGE	By	Date	Qty	Approval Chief Eng / Prod Mgr	Approval QC Inspector

Part No: _____ **PAR #:** _____ **Fault Category:** _____ **NCR:** Yes No **DQA:** _____ **Date:** _____

Resolution: _____ **Disposition:** _____ **QA: N/C Closed:** _____ **Date:** _____

NCR:		WORK ORDER NON-CONFORMANCE (NCR)						
DATE	STEP	Description of NC Section A	Corrective Action Section B			Verification Section C	Approval Chief Eng	Approval QC Inspector
			Initial Chief Eng	Action Description Chief Eng	Sign & Date			

NOTE: Date & initial all entries

H:\fFORMS\Quality Assurance\approved QA\NCRWO RevE

Work Order ID 73091

Thursday, August 25, 2011 1:27:01 PM

Item ID: D3299-7 **Accept** **Setup Start**

Revision ID:

Item Name: Fitting **Stop**

Start Date: 8/25/2011 **Start Qty:** 4.00 **Cust Item ID:**

Required Date: 9/5/2011 **Req'd Qty:** 4.00 **Customer:**

Reference:

Approvals: **Process Plan:** _____ **Date:** _____ **Tooling:** _____ **Date:** _____ **Run Start**

QC: _____ **Date:** _____ **SPC (Y/N):** _____ **Date:** _____ **Stop**

Sequence ID/ Work Center ID	Operation Description	Set Up/ Run Hours	Tool ID	Tool #	Plan Code	Accept Qty	Reject Qty	Reject Number	Insp. Stamp
150	Outsource process-Anodize per QSI017 4.1.10.1	0.00							
Outsource4	**Memo**	0.00				4	11209	-76	
Outsource process - Anodize	Issue P/O: 73091 ☐Anodize as per Dwg D3299☐Possible Supplier: TNM Paint☐Material release note is required								
160	Receive & Inspect for Damage & Mat'l Certs	0.00							
Packaging	**Memo**	0.00					11/10/5	(4)	
Packaging	Ensure Material Release Note is attached								
170	QC5- Inspect part completeness to step on W/O	0.00							
QC	**Memo**	0.00				(4)			
Quality Control									

Sulcolos

Dart Aerospace Ltd

W/O:		WORK ORDER CHANGES					
DATE	STEP	PROCEDURE CHANGE	By	Date	Qty	Approval Chief Eng / Prod Mgr	Approval QC Inspector

Part No: _____ **PAR #:** _____ **Fault Category:** _____ **NCR:** Yes No **DQA:** _____ **Date:** _____

Resolution: _____ **Disposition:** _____ **QA: N/C Closed:** _____ **Date:** _____

NCR:		WORK ORDER NON-CONFORMANCE (NCR)						
DATE	STEP	Description of NC Section A	Corrective Action Section B			Verification Section C	Approval Chief Eng	Approval QC Inspector
			Initial Chief Eng	Action Description Chief Eng	Sign & Date			

NOTE: Date & initial all entries

H:\fFORMS\Quality Assurance\approved QA\NCRWO RevE

Work Order ID 73091

Thursday, August 25, 2011 1:27:01 PM

Item ID: D3299-7 **Accept** **Setup Start**

Revision ID:

Item Name: Fitting **Stop**

Start Date: 8/25/2011 **Start Qty:** 4.00 **Cust Item ID:**

Required Date: 9/5/2011 **Req'd Qty:** 4.00 **Customer:**

Reference:

Approvals: **Process Plan:** _____ **Date:** _____ **Tooling:** _____ **Date:** _____ **Run Start**

QC: _____ **Date:** _____ **SPC (Y/N):** _____ **Date:** _____ **Stop**

Sequence ID/ Work Center ID	Operation Description	Set Up/ Run Hours	Tool ID	Tool #	Plan Code	Accept Qty	Reject Qty	Reject Number	Insp. Stamp
180	Identify as per dwg & Stock Location: 047	0.00							
Packaging	Memo	0.00							
Packaging									
190	QC21- Final Inspection - Work Order Release	0.00							
QC	Memo	0.00							
Quality Control									

11/10/5

11/10/5

MF 11-10-5

Dart Aerospace Ltd

W/O:		WORK ORDER CHANGES					
DATE	STEP	PROCEDURE CHANGE	By	Date	Qty	Approval Chief Eng / Prod Mgr	Approval QC Inspector

Part No: _____ **PAR #:** _____ **Fault Category:** _____ **NCR:** Yes No **DQA:** _____ **Date:** _____

Resolution: _____ **Disposition:** _____ **QA: N/C Closed:** _____ **Date:** _____

NCR:		WORK ORDER NON-CONFORMANCE (NCR)						
DATE	STEP	Description of NC Section A	Corrective Action Section B			Verification Section C	Approval Chief Eng	Approval QC Inspector
			Initial Chief Eng	Action Description Chief Eng	Sign & Date			

NOTE: Date & initial all entries

H:\fFORMS\Quality Assurance\approved QA\NCRWO RevE

Picklist Print

Thursday, August 25, 2011 1:26:57 PM

Work Order ID: 73091

Parent Item: D3299-7

Parent Item Name: Fitting

Start Date: 8/25/2011 **Required Date:** 9/5/2011

Start Qty: 4.00 **Required Qty:** 4.00

Comments: IPP REV:A NEW ISSUE 10-01-19 JLM VERIFIED BY:EC

Component Item ID/ Item Name	Replacement Item ID	Mfg/ Purch	Bin Item	Primary Location	Last Location	Route Seq ID	Unit of Measure	Qty on Hand	Qty per Kit	Total Qty	Qty Issued	Date Issued	Status
M6061T6B1.250X01.250		Purchased	No			100	f	6.5091	0.1917	0.807158			
6061-T6 Bar 1.25 x 1.25													

Location	Loc Qty	Loc Code
MAT003	6.5091	
117798	6.5091	

1.5 X 1.25

M110936

M118071

M6061T6B1.500X01.250

1 Rod

7.5 inches

11/09/23

Dart Aerospace Ltd

W/O:		WORK ORDER CHANGES					
DATE	STEP	PROCEDURE CHANGE	By	Date	Qty	Approval Chief Eng / Prod Mgr	Approval QC Inspector

Part No: _____ **PAR #:** _____ **Fault Category:** _____ **NCR:** Yes No **DQA:** _____ **Date:** _____

Resolution: _____ **Disposition:** _____ **QA: N/C Closed:** _____ **Date:** _____

NCR:		WORK ORDER NON-CONFORMANCE (NCR)						
DATE	STEP	Description of NC Section A	Corrective Action Section B			Verification Section C	Approval Chief Eng	Approval QC Inspector
			Initial Chief Eng	Action Description Chief Eng	Sign & Date			

NOTE: Date & initial all entries

H:\fFORMS\Quality Assurance\approved QA\NCRWO RevE

DART AEROSPACE LTD	Work Order:	73091
Description: Fitting	Part Number:	D3299-7
Inspection Dwg: D3299 Rev: C		Page 1 of 1

FIRST ARTICLE INSPECTION CHECKLIST

[X] First Article [ ] Prototype

Drawing Dimension	Tolerance	Actual Dimension	Accept	Reject	Method of Inspection	Comments
1.25	+/-0.030	1.25 - 1.265	✓			
Ø1.63	+/-0.030	1.628	✓			
Ø0.302	+0.005/-0.000	.303	✓			
1.08	+/-0.030	1.08	✓			
0.04 X 45°	+/-0.030 x +/-0.5°	.04X45°	✓			
1/4-NPT	N/A	1/4 NPT	✓			
0.550	+/-0.010	.551	✓			
1.00	+/-0.030	.992	✓			
2.19	+/-0.030	2.185	✓			
0.640	+/-0.010	.639	✓			
53°	+/-0.5°	53°	✓			
Ø0.650	+0.000/-0.005	.646	✓			
Ø0.391	+0.006/-0.001	.394	✓			
3/4"-16 UNF-3A	N/A	3/4-16 UNF	✓			
0.25	+/-0.030	.25	✓			
0.10	+/-0.030	.10	✓			
Ø0.482	+/-0.010	.482	✓			
Ø0.540	+/-0.010	.538	✓			
0.118	+/-0.010	.115	✓			

Measured by:	[illegible]	Audited by:	[illegible]	Prototype Approval:	N/A
Date:	11/8/24	Date:	11.9.24	Date:	N/A

Rev	Date	Change	Revised by	Approved
A	10.02.02	New Issue	KJ	[illegible]

7694

Dart Aerospace Ltd

W/O:		WORK ORDER CHANGES					
DATE	STEP	PROCEDURE CHANGE	By	Date	Qty	Approval Chief Eng / Prod Mgr	Approval QC Inspector

Part No: _____ **PAR #:** _____ **Fault Category:** _____ **NCR:** Yes No **DQA:** _____ **Date:** _____

Resolution: _____ **Disposition:** _____ **QA: N/C Closed:** _____ **Date:** _____

NCR:		WORK ORDER NON-CONFORMANCE (NCR)						
DATE	STEP	Description of NC Section A	Corrective Action Section B			Verification Section C	Approval Chief Eng	Approval QC Inspector
			Initial Chief Eng	Action Description Chief Eng	Sign & Date			

NOTE: Date & initial all entries

H:\FORMS\Quality Assurance\approved QA\NCRWO RevE

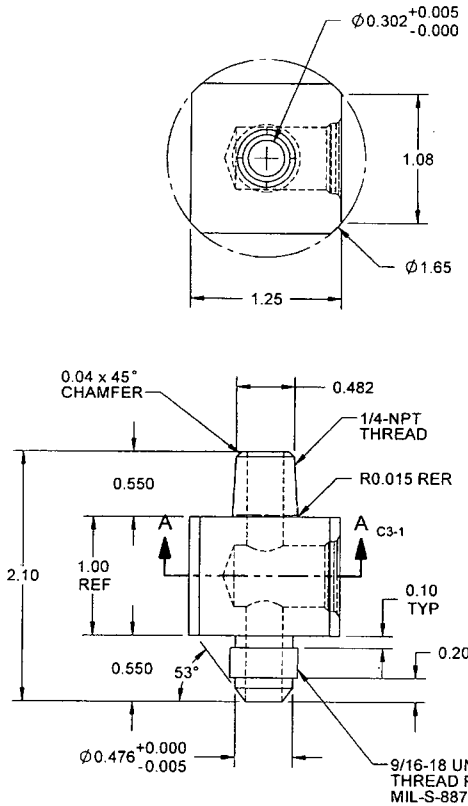

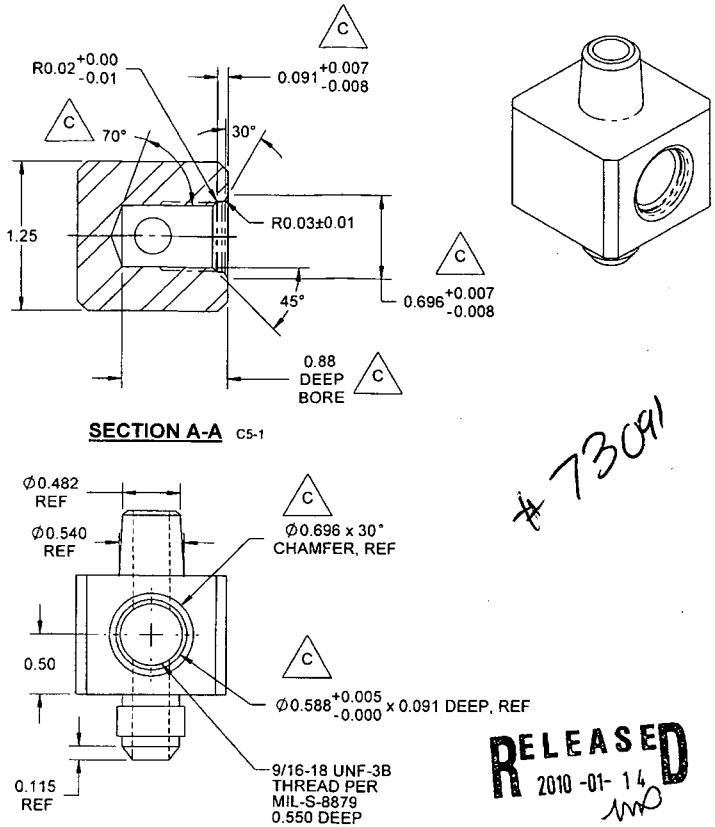

#73091

RELEASED 2010-01-14

D3299-1 FITTING

NOTES:

C

MATERIAL: 6061-T6/T651/T6510/T6511/T62 ALUMINUM BAR
PER QQ-A-225/8 OR AMS-QQ-A-225/8 (OR AMS 4117/4128/4115/4116)
OR QQ-A-200/8 OR AMS-QQ-A-200/8 (OR AMS 4160)
OR ASTM B211 OR ASTM B221
REF DART SPEC M6061T6B

2) FINISH: BLUE ANODIZE PER MIL-A-8625F TYPE I OR IC OR II OR IIB CLASS 2
POSSIBLE SUPPLIER: ANODIZING TNM PAINT

3) TOLERANCES: PER DART QSI 018 UNLESS OTHERWISE NOTED

4) UNITS: INCHES UNLESS OTHERWISE NOTED

5) BREAK SHARP EDGES: EDGES: 0.005 TO 0.010 MAX

6) IDENTIFICATION: IDENTIFY WITH DART P/N "D3299-1" & B/N USING FINE POINT PERMANENT INK MARKER

7) WEIGHT: 0.42 lbs

REV.	DESCRIPTION	BY	DATE
C	DRAWING UPDATED TO CURRENT STANDARDS. REVISE MATERIAL BAR WAS HEX BAR (ZN A8-1); ADD -7 (ZN A4-4); REVISE DIMENSIONS TO EQUAL TOOL DIMENSIONS (ZN D2-1, D3-1, C2-1, B2-1, D5-4, C4-4, B4-4, C1-4) PER CAR 09-004	RF	09.12.30
B	1.09 WAS 0.837; Ø302 WAS Ø0.297	RF	05.04.28
A	NEW ISSUE	RF	04.07.06

DESIGN	RF	DART AEROSPACE LTD HAWKESBURY, ONTARIO, CANADA	
DRAWN	RF		
CHECKED		DRAWING NO. D3299	REV. C SHEET 1 OF 4
MFG. APPR.			
APPROVED		TITLE FITTING	SCALE NTS
DE APPR.			
DATE	09.12.30		

Dart Aerospace Ltd

W/O:		WORK ORDER CHANGES					
DATE	STEP	PROCEDURE CHANGE	By	Date	Qty	Approval Chief Eng / Prod Mgr	Approval QC Inspector

Part No: _____ **PAR #:** _____ **Fault Category:** _____ **NCR:** Yes No **DQA:** _____ **Date:** _____

Resolution: _____ **Disposition:** _____ **QA: N/C Closed:** _____ **Date:** _____

NCR:		WORK ORDER NON-CONFORMANCE (NCR)						
DATE	STEP	Description of NC Section A	Corrective Action Section B			Verification Section C	Approval Chief Eng	Approval QC Inspector
			Initial Chief Eng	Action Description Chief Eng	Sign & Date			

NOTE: Date & initial all entries

H:\fFORMS\Quality Assurance\approved QA\NCRWO RevE

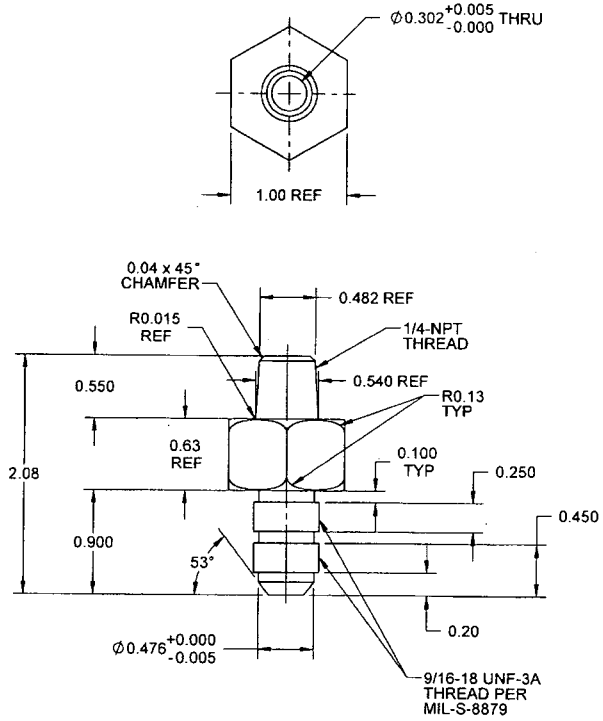

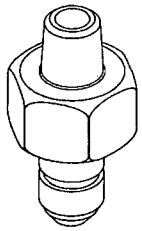

#73091

RELEASED 2010-01-26

D3299-3 FITTING

NOTES:
MATERIAL: 6061-T6/T651/T6510/T6511/T62 ALUMINUM 1.00" HEX BAR
PER QQ-A-200/8 OR QQ-A-225/8 (OR AMS 4117/4128/4115/4116)
OR ASTM B211 OR ASTM B221
REF DART SPEC M6061T6H1.000
2) FINISH: BLUE ANODIZE PER MIL-A-8625F TYPE I OR IC OR II OR IIB CLASS 2
POSSIBLE SUPPLIER: ANODIZING TNM PAINT
3) TOLERANCES: PER DART QSI 018 UNLESS OTHERWISE NOTED
4) UNITS: INCHES UNLESS OTHERWISE NOTED
5) BREAK SHARP EDGES: EDGES: 0.005 TO 0.010 MAX
6) IDENTIFICATION: IDENTIFY WITH DART P/N "D3299-3" & B/N USING FINE POINT PERMANENT INK MARKER
7) WEIGHT: 0.20 lbs

DESIGN	RF	DART AEROSPACE LTD HAWKESBURY, ONTARIO, CANADA
DRAWN	RF	
CHECKED		DRAWING NO. D3299 — REV. C — SHEET 2 OF 4
MFG. APPR.		
APPROVED		TITLE: FITTING — SCALE: NTS
DE APPR.		
DATE	09.12.30	

Dart Aerospace Ltd

W/O:		WORK ORDER CHANGES					
DATE	STEP	PROCEDURE CHANGE	By	Date	Qty	Approval Chief Eng / Prod Mgr	Approval QC Inspector

Part No: _____ **PAR #:** _____ **Fault Category:** _____ **NCR:** Yes No **DQA:** _____ **Date:** _____

Resolution: _____ **Disposition:** _____ **QA: N/C Closed:** _____ **Date:** _____

NCR:		WORK ORDER NON-CONFORMANCE (NCR)						
DATE	STEP	Description of NC Section A	Corrective Action Section B			Verification Section C	Approval Chief Eng	Approval QC Inspector
			Initial Chief Eng	Action Description Chief Eng	Sign & Date			

NOTE: Date & initial all entries

H:\fFORMS\Quality Assurance\approved QA\NCRWO RevE

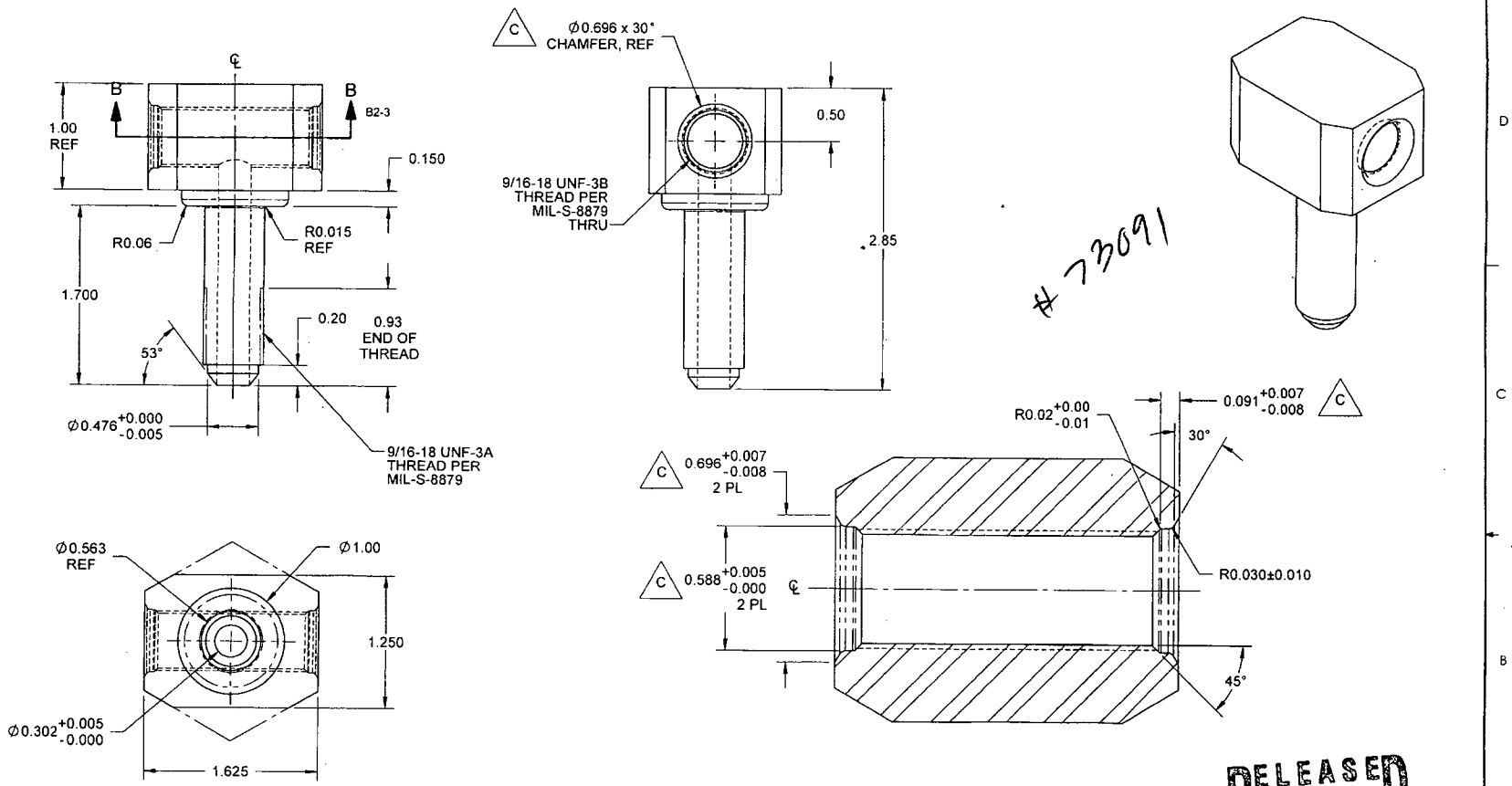

D3299-5 FITTING

NOTES:
1) MATERIAL: 6061-T6/T651/T6510/T6511/T62 ALUMINUM 1.63" HEX BAR
PER QQ-A-200/8 OR QQ-A-225/8 (OR AMS 4117/4128/4115/4116)
OR ASTM B211 OR ASTM B221
REF DART SPEC M6061T6H1.625
2) FINISH: BLUE ANODIZE PER MIL-A-8625F TYPE I OR IC OR II OR IIB CLASS 2
POSSIBLE SUPPLIER: ANODIZING TNM PAINT
3) TOLERANCES: PER DART QSI 018 UNLESS OTHERWISE NOTED
4) UNITS: INCHES UNLESS OTHERWISE NOTED
5) BREAK SHARP EDGES: EDGES: 0.005 TO 0.010 MAX
6) IDENTIFICATION: IDENTIFY WITH DART P/N "D3299-5" & B/N USING FINE POINT PERMANENT INK MARKER
7) WEIGHT: 0.57 lbs

DESIGN	RF	DART AEROSPACE LTD HAWKESBURY, ONTARIO, CANADA
DRAWN	RF	
CHECKED		DRAWING NO. D3299 — REV. C — SHEET 3 OF 4
MFG. APPR.		
APPROVED		TITLE FITTING — SCALE NTS
DE APPR.		
DATE	09.12.30	

Dart Aerospace Ltd

W/O:		WORK ORDER CHANGES					
DATE	STEP	PROCEDURE CHANGE	By	Date	Qty	Approval Chief Eng / Prod Mgr	Approval QC Inspector

Part No: _____ **PAR #:** _____ **Fault Category:** _____ **NCR:** Yes No **DQA:** _____ **Date:** _____

Resolution: _____ **Disposition:** _____ **QA: N/C Closed:** _____ **Date:** _____

NCR:		WORK ORDER NON-CONFORMANCE (NCR)						
DATE	STEP	Description of NC Section A	Corrective Action Section B			Verification Section C	Approval Chief Eng	Approval QC Inspector
			Initial Chief Eng	Action Description Chief Eng	Sign & Date			

NOTE: Date & initial all entries

H:\fFORMS\Quality Assurance\approved QA\NCRWO RevE

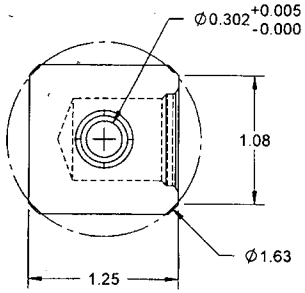

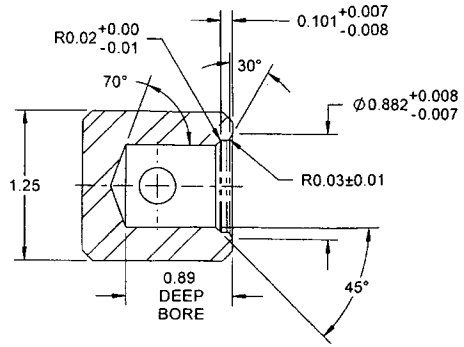

SECTION C-C C5-4

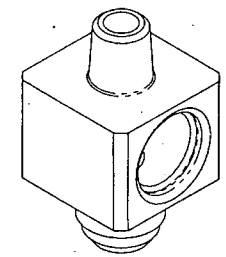

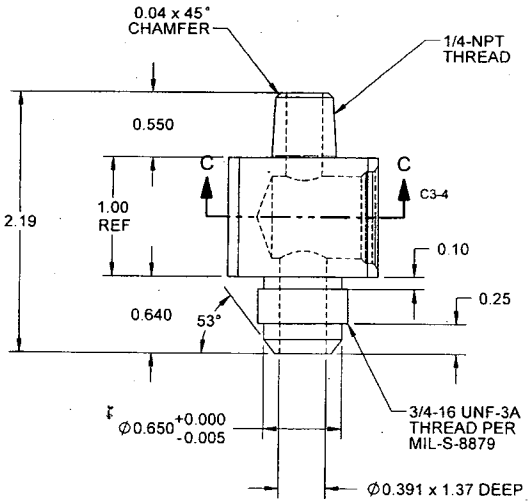

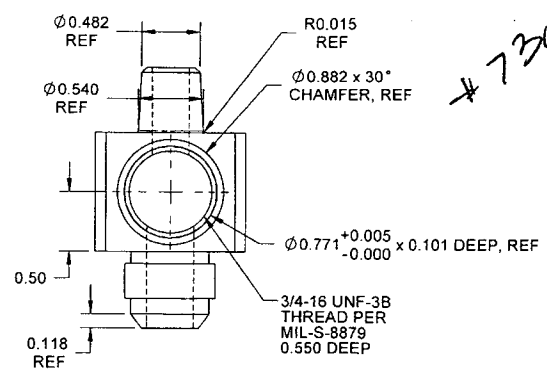

#73091

C

D3299-7 FITTING

RELEASED
2010 -01- 1
MP

NOTES:
MATERIAL: 6061-T6/T651/T6510/T6511/T62 ALUMINUM BAR
PER QQ-A-225/8 OR AMS-QQ-A-225/8 (OR AMS 4117/4128/4115/4116)
OR QQ-A-200/8 OR AMS-QQ-A-200/8 (OR AMS 4160)
OR ASTM B211 OR ASTM B221
REF DART SPEC M6061T6B
2) FINISH: BLUE ANODIZE PER MIL-A-8625F TYPE I OR IC OR II OR IIB CLASS 2
POSSIBLE SUPPLIER: ANODIZING TNM PAINT
3) TOLERANCES: PER DART QSI 018 UNLESS OTHERWISE NOTED
4) UNITS: INCHES UNLESS OTHERWISE NOTED
5) BREAK SHARP EDGES: EDGES: 0.005 TO 0.010 MAX
6) IDENTIFICATION: IDENTIFY WITH DART P/N "D3299-7" & B/N USING FINE POINT PERMANENT INK MARKER
7) WEIGHT: 0.40 lbs

DESIGN	RF	**DART AEROSPACE LTD** HAWKESBURY, ONTARIO, CANADA
DRAWN	RF	
CHECKED		DRAWING NO. D3299 — REV. C — SHEET 4 OF 4
MFG. APPR.		
APPROVED		TITLE: FITTING — SCALE: NTS
DE APPR.		
DATE	09.12.30	

Dart Aerospace Ltd

W/O:		WORK ORDER CHANGES					
DATE	STEP	PROCEDURE CHANGE	By	Date	Qty	Approval Chief Eng / Prod Mgr	Approval QC Inspector

Part No: _____ **PAR #:** _____ **Fault Category:** _____ **NCR:** Yes No **DQA:** _____ **Date:** _____

Resolution: _____ **Disposition:** _____ **QA: N/C Closed:** _____ **Date:** _____

NCR:		WORK ORDER NON-CONFORMANCE (NCR)						
DATE	STEP	Description of NC Section A	Corrective Action Section B			Verification Section C	Approval Chief Eng	Approval QC Inspector
			Initial Chief Eng	Action Description Chief Eng	Sign & Date			

NOTE: Date & initial all entries

H:\fFORMS\Quality Assurance\approved QA\NCRWO RevE

Dart Aerospace Ltd.
1270 Aberdeen Street
Hawkesbury, ON K6A 1K7
Tel: 613 632 9577
Fax: 613 632 1053

PURCHASE ORDER

Purchase Order ID PO15017

Purchase Order Date 9/26/2011
PO Print Date 9/26/2011

Order From : VC-AND002

ANODIZING & PAINT T.N.M. INC.
21 AVIATION ROAD
POINTE CLAIRE, QC H9R 4Z2
CA

Contact Name		**Buyer**	Linda Lacelle
Vendor Phone	514 429 7777	**Requisition Nbr**	
Vendor Fax	514 429 5108	**Tax Resale Nbr**	10127-2607
Vendor Account Nbr		**Terms**	Net 30
		Currency	CAD
		FOB	Destination-Collect

Ship To : DART AEROSPACE LTD 1270 ABERDEEN
HAWKESBURY, ON K6A 1K7
CANADA

Line Nbr	Reference / Revision ID / Vendor Part Number	Description/ Mfg ID	Req Date/ Taxable	Req Qty/ Unit of Measure	Ship Method	Unit Price	Extended Price
1	73091	D3299-7 B73091	9/29/2011 No	4.00	FedEx Overnight	$11.2500	$45.00

Special Inst: Blue Anodize per MIL-A-8625F
TYPE I OR 1C OR II OR 11B, CLASS 2

PO Total: **$45.00**

No substitution or deviation without consent.
Certificate of Conformity or Material Certification required when applicable

Change Nbr: 1 **Change Date:** 9/26/2011

TNM

Packing Slip

21 chemin de l'Aviation, Pointe-Claire
QC H9R 4Z2
Canada
Phone:514-429-7777 Fax:514-429-5108
EMail:info@tnminc.ca

DATE	PACKING SLIP #
10/4/2011	- 89690

BILL TO:

DART AEROSPACE LTD.
1270 ABERDEEN STREET
HAWKESBURY ON K6A 1K7

SHIP TO:

No. De Commande/PO#	CUST	TERMS	REP	SHIP	VIA	F.O.B	JOB NUMBER
B73091	0094	NET 30		10/4/2011	**Purolator**		131595-001

PO Line#: 1

QTY DUE	QTY SHIPPED	QTY B/O	DESCRIPTION
4	4	0	P/N:D3299-7 TNM-REV:1 Minimum Charge

Sign Here: _____

En cas de perte ou de dommages dû à la valeur intrinsèque de certaines pièces, la responsabilité se limitera à deux fois la valeur du traitement des pièces perdues ou endommagées.
Due to the intrinsic value of some parts, we are only liable for loss or damage to twice the invoiced finishing costs.

Anodisation & Peinture TNM Inc

21 chemin de l'Aviation, Pointe-Claire QC H9R 4Z2
Telephone 514-429-7777 Fax 514-429-5108
AS9100 Rev B Certified QMS, Nadcap, Chemical & NDT

C of C: 89690

Nadcap

10/4/2011

CLIENT / CUSTOMER:

DART AEROSPACE LTD.
1270 ABERDEEN STREET
HAWKESBURY ON K6A 1K7

CERTIFICATE OF COMPLIANCE
CERTIFICAT DE CONFORMITE

PURCHASE ORDER / NO. DE COMMANDE: B73091

ITEM	COMMANDE ORDERED	EXPEDIE SHIPPED	PART NUMBER & DESCRIPTION PROTECTIVE FINISH CODES	PART PROCESS & TREATMENT
1	4	4	P/N:D3299-7 TNM-REV:1 INLET WELDMENT MAT'L: ALUMINUM	BLUE ANODIZE PER MIL-A-8625F1 TYPE II CLASS 2 ALL OVER

Sullo/05

Nous certifions que les pièces énumérées ont été traitées, testées et inspectées selon les spécifications mentionnées.
Les cartes de travail ont été remplies et sont disponibles pour consultation, sur demande.
All parts are processed, tested, and inspected to the requirements of above specifications.
Travel cards have been filled and are available for viewing upon request.
NOTE: Les pièces peintes seront complètement résistantes au solvant après 7 (sept) jours complets de séchage à l'air ambiant.
NOTE: Painted Parts will be Fully Solvent Resistant after 7 (seven) Full Days of Air Curing at Ambient Temperatures"

Signature/Signed:

Directeur de la Qualtie / Q.A. Manager

COFC016 REV: COFC016